Basic Surface Area and Volume of Spheres Notes

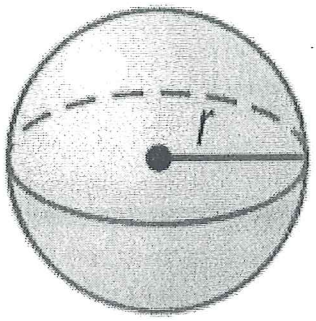

Surface Area:	Volume:
$SA = 4\pi r^2$	$V = \frac{4}{3}\pi r^3$

Find the volume and surface area of the sphere. Round to the nearest tenth.

Example1:

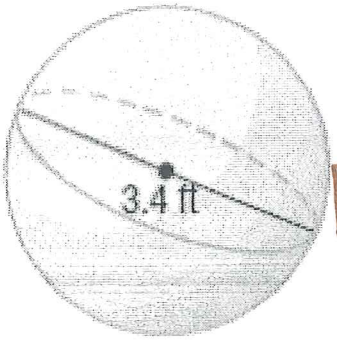

$r = 1.7 ft$

$SA = 4\pi r^2$

$SA = 4\pi(1.7)^2$

$SA \approx 36.3 ft^2$

$V = \frac{4}{3}\pi r^3$

$V = \frac{4}{3}\pi(1.7)^3$

$V \approx 20.6 ft^3$

Example 2:
C = 24 inches

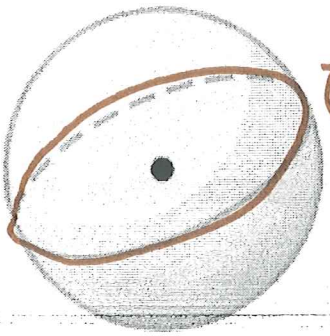

$C = 2\pi r$ need $\underline{r}$

$\frac{24}{(2\pi)} = \frac{2\pi r}{(2\pi)}$

$r = 3.8 in$

$V = \frac{4}{3}\pi r^3$

$V = \frac{4}{3}\pi(3.8)^3$

$V = 229.8 in^3$

$SA = 4\pi r^2$

$SA = 4\pi(3.8)^2$

$SA \approx 181.5 in^2$

Find the volume and surface area of the solid or composite below. Round to the nearest tenth.

Example 3:

$r = 14$

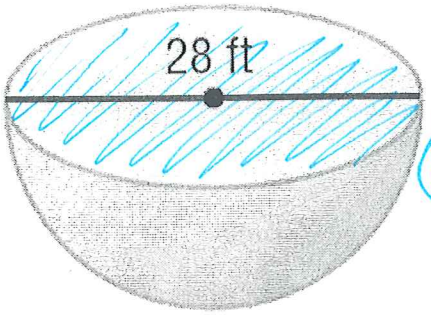

$SA = \frac{1}{2}$ sphere + top circle

$SA = \frac{1}{2}(4\pi(14)^2) + \pi 14^2$

$SA \approx 1847.3 \text{ ft}^2$

$V = \frac{1}{2}\left(\frac{4}{3}\pi r^3\right)$

$V = \frac{1}{2}\left(\frac{4}{3}\pi 14^3\right)$

$V \approx 5747.0 \text{ ft}^3$

Example 4:

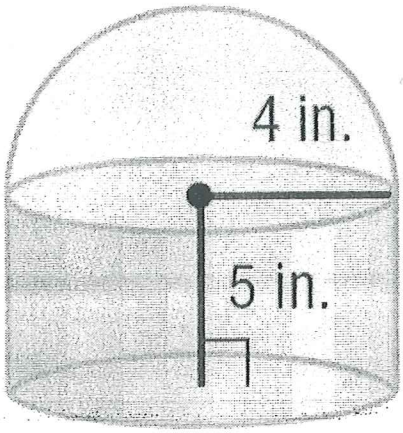

$r = 4 \quad h = 5$

$SA =$ Bottom Circle + rect + $\frac{1}{2}$ sphere

$= \pi r^2 + 2\pi r h + \frac{1}{2} 4\pi r^2$

$SA = \pi 4^2 + 2\pi 4(5) + \frac{1}{2} 4\pi 4^2$

$SA \approx 276.5 \text{ in}^2$

cyl. $\cancel{2}\pi r^2 + 2\pi r h$

$V =$ cyl. $+ \frac{1}{2}$ sphere

$V = B \cdot h + \frac{1}{2}\frac{4}{3}\pi r^3$

$V \approx \pi 4^2(5) + \frac{1}{2}\left(\frac{4}{3}\pi 4^3\right)$

$V \approx 385.4 \text{ in}^3$

12.6 Spheres

Radius- a segment which has one endpoint at the center and the other on the sphere

$\overline{DC}$, $\overline{DB}$, $\overline{DA}$

Chord- a segment which has both endpoints on the sphere $\overline{FG}$, $\overline{AB}$

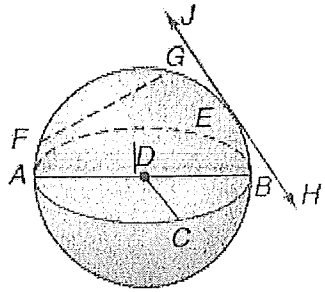

Diameter- a segment with both endpoints on sphere and goes through center

$\overline{AB}$

Tangent- a line/segment which intersects the sphere exactly once and does not go through interior

Great circle- circle which contains the center of sphere

Surface area = $\underbrace{4\pi r^2}_{\text{Area of Great Circle}}$
sphere

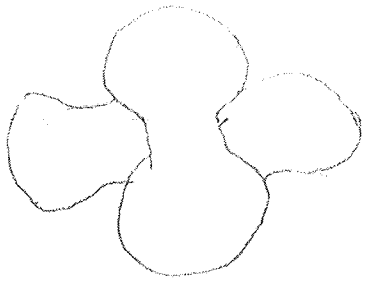

Ex 1 A ball has a circumference of 24 in. Find the surface area.
of Great Circle

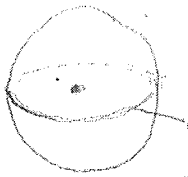

$C = 2\pi r$

$24 = 2\pi r$

$\frac{12}{\pi} = r$

$S.A = 4\pi r^2$

$= 4\pi\left(\frac{12}{\pi}\right)^2$

$= 4\cancel{\pi}\frac{144}{\pi^{\cancel{2}}}$

$= \frac{576}{\pi} \approx 183.35 in^2$

Ex2 Find the surface area of a hemisphere with a radius of 3.8 in.

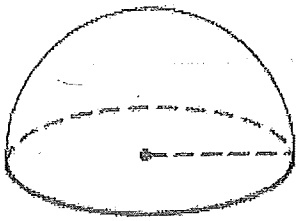

$S.A. = \frac{1}{2}$ sphere + circular base

$= \frac{1}{2}4\pi r^2 + \pi r^2$

$= 2\pi r^2 + \pi r^2$

$= 3\pi r^2$

$= 3\pi(3.8)^2$

$= 43.32\pi$

$\boxed{S.A \approx 136.09 in^2}$