Name: _____ SA + Volume – Day 3

SA and Volume of Cylinders and Cones :

Surface Area:	*Lateral Area:*	*Volume:*
$SA = 2\pi r^2 + 2\pi r h$	$LA = 2\pi r \cdot h$ (Rectangle)	

Example~~1~~2:
Find the volume, lateral area and surface area of the prism.

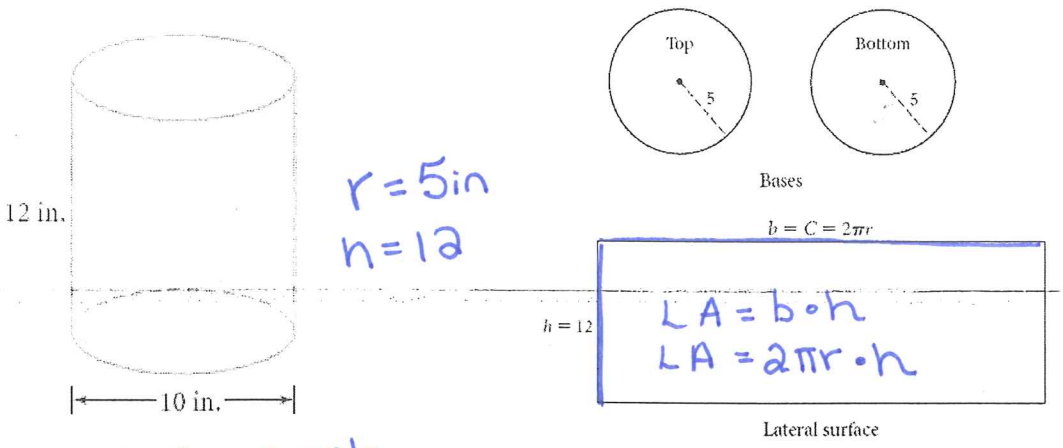

$r = 5in$
$h = 12$

$LA = b \cdot h$
$LA = 2\pi r \cdot h$

$LA = 2\pi r h$
$LA = 2\pi 5 \cdot 12$
$LA = 120\pi in^2$
$\boxed{LA \approx 376.99 = 377.0 in^2}$

$SA = 2\pi r^2 + 2\pi r h$
$SA = 2\pi 5^2 + 2\pi 5 \cdot 12$
$SA = 50\pi + 120\pi$
$SA = 170\pi in^2$
$\boxed{SA \approx 534.1 in^2}$

Practice Examples: Find the volume, lateral area and surface area of the solid.

1.

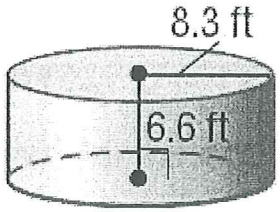

$LA = 344.2 ft^2$

$SA = 777.0 ft^2$

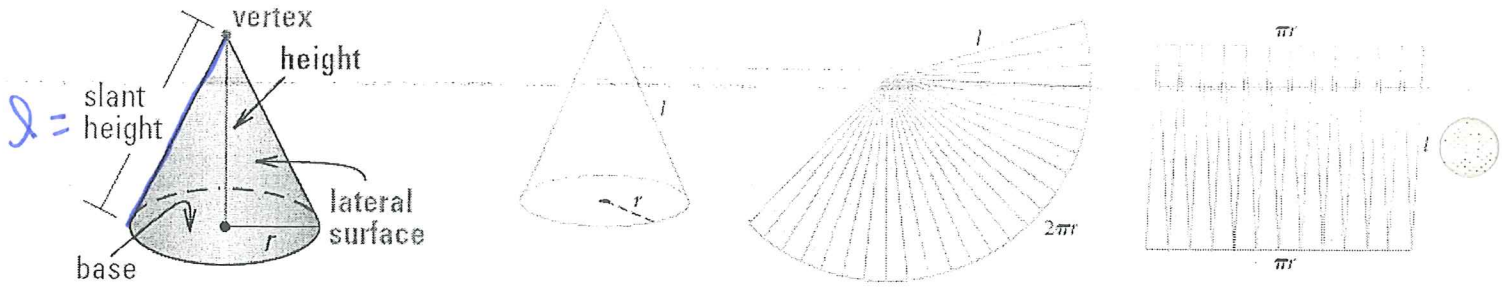

Example 2:
Find the volume and surface area of the solid. Round to the nearest tenth.

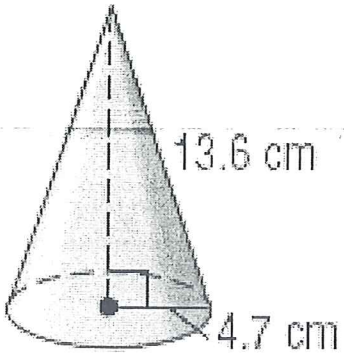

Surface Area:	Volume:
$LA = \pi r \ell$ $SA = \pi r^2 + \pi r \ell$	

Example 3:
Find the volume and surface area of the solid. Round to the nearest tenth.

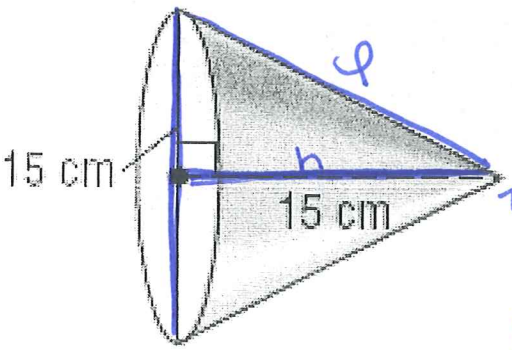

Surface Area:	Volume:
$SA = \pi r^2 + \pi r \ell$ $\ell = 16.8cm$ 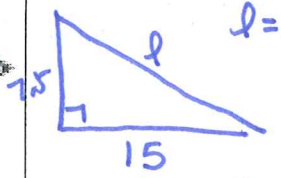 $SA = \pi(7.5)^2 + \pi(7.5)(16.8)$ $SA \approx 572.6cm^2$	

HW: Pg 695 # 1-5, 10-13, 20-24 + Pg 708 # 1-4, 11-22
DRAW ALL Figures!