Vector Notes Day 3:

Example 1. Add the two vectors. Find the direction and magnitude.

a.

1cm = 10 m/s

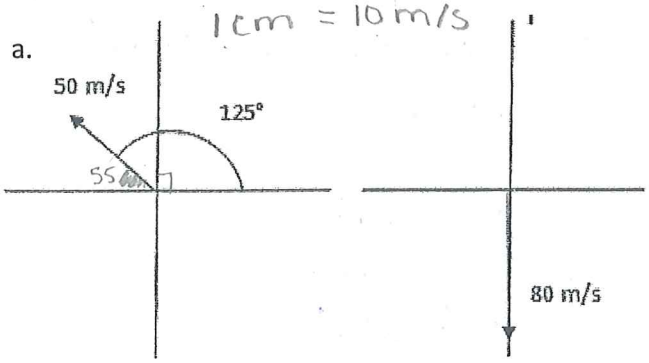

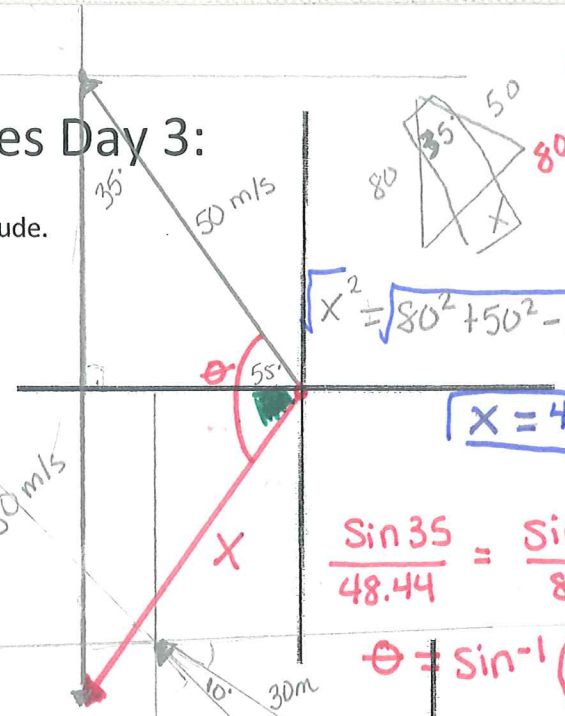

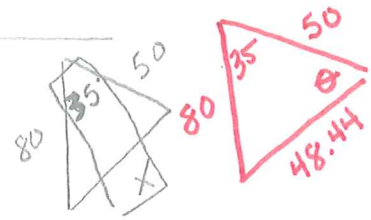

$X^2 = \sqrt{80^2 + 50^2 - 2(80)(50)\cos 35°}$

$\boxed{X = 48.44 \text{ m/s}}$

$\frac{\sin 35}{48.44} = \frac{\sin \theta}{80}$

$\theta = \sin^{-1}\left(\frac{80 \cdot \sin(35)}{48.44}\right)$

$\theta = 71.31°$
$-55°$
$16.31°$

$\boxed{W\ 16.31°\ S}$

b.

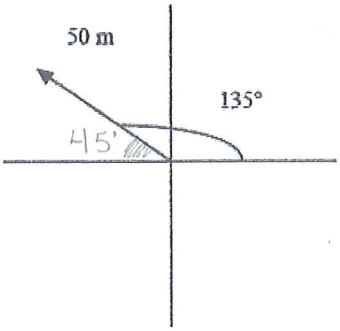

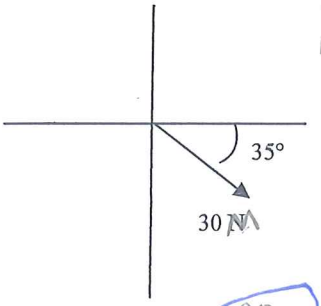

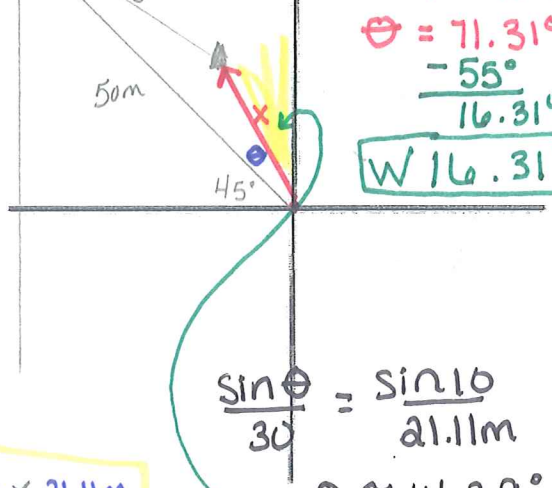

1cm = 10m

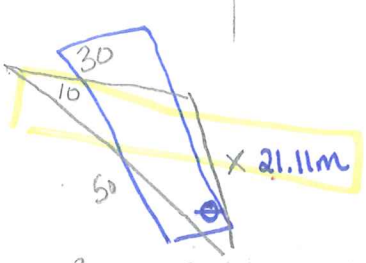

$X^2 = 50^2 + 30^2 - 2(50)(30)\cos 10$

$\boxed{X \approx 21.11 \text{m}}$

$\frac{\sin \theta}{30} = \frac{\sin 10}{21.11 \text{m}}$

$\theta \approx 14.29°$

must Find Yellow angle

90
-45
-14.29

$N\ 30.71°\ W$

Example 2) A boat is traveling across a river as shown below. Find the actual velocity (velocity relative to the shore) of the boat.

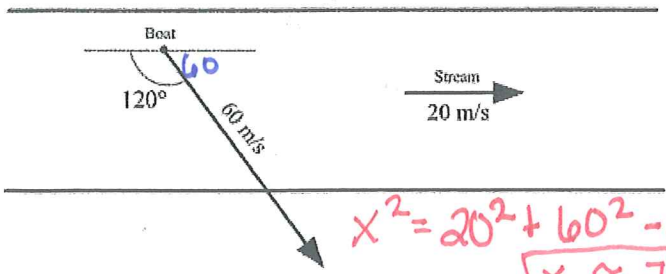

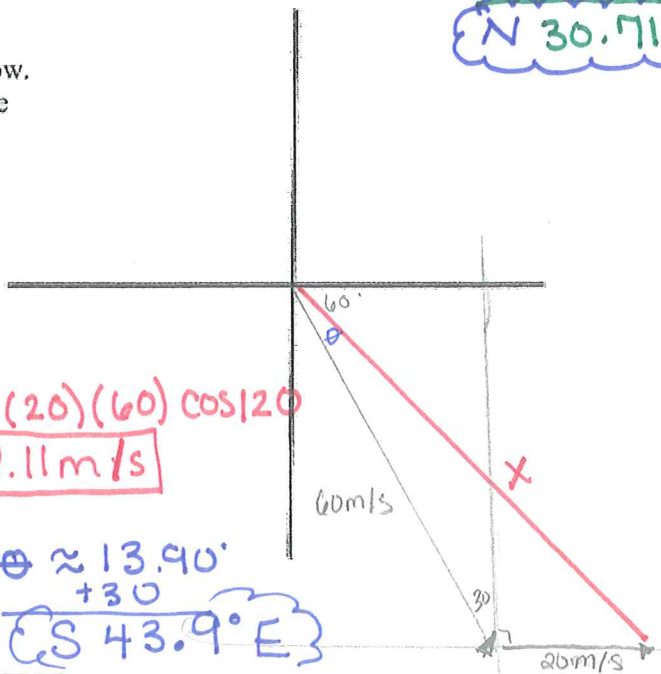

$X^2 = 20^2 + 60^2 - 2(20)(60)\cos 120$

$\boxed{X \approx 72.11 \text{m/s}}$

$\frac{\sin 120}{72.11} = \frac{\sin \theta}{20}$

$\theta \approx \sin^{-1}\left(\frac{20 \sin(120)}{72.11}\right)$

$\theta \approx 13.90°$
$+30$

$S\ 43.9°\ E$

3. Find the resultant magnitude & direction for the following headings.

Heading of E 40° N for 10 miles then W 25° S for 5 miles. 2miles = 1cm

40° N of E

25° south of west

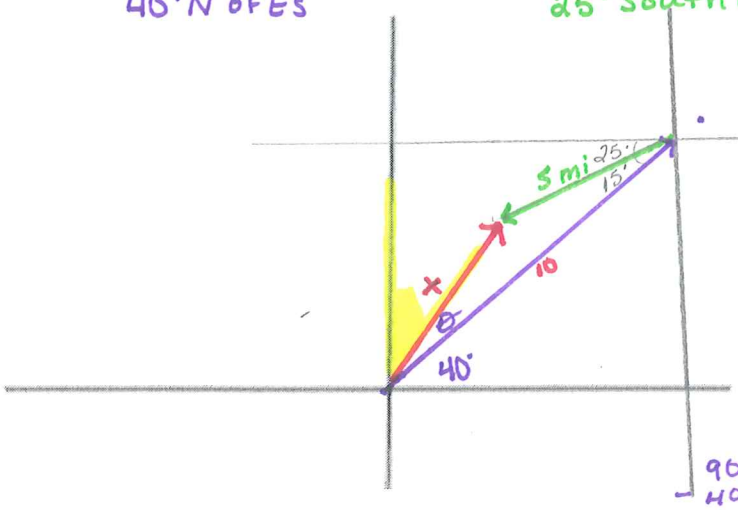

$x^2 = 10^2 + 5^2 - 2(10)(5)\cos 15$

$\boxed{x \approx 5.33 \text{ miles}}$

$\frac{\sin\theta}{5} = \frac{\sin 15}{5.33}$

$\theta = 14.05$

$90 - 40 - 14.05 = 35.95$

$\boxed{\therefore \text{ direction is } N\ 35.95^\circ E}$

4.

BOATING Raphael sails his boat due east at a rate of 10 knots. If there is a current of 3 knots moving 30° south of east, what is the resultant speed and direction of the boat?

1 cm = 1 knot

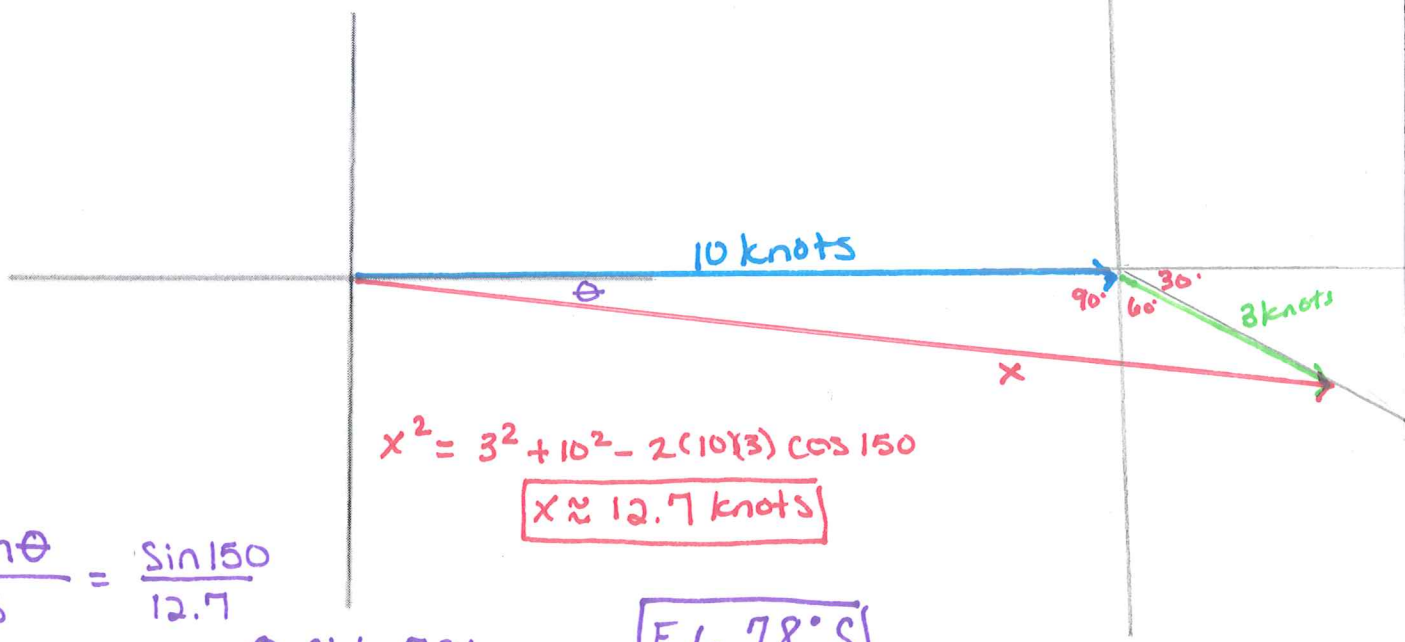

$x^2 = 3^2 + 10^2 - 2(10)(3)\cos 150$

$\boxed{x \approx 12.7 \text{ knots}}$

$\frac{\sin\theta}{3} = \frac{\sin 150}{12.7}$

$\theta \approx 6.78^\circ$

$\boxed{E\ 6.78^\circ S}$

5. An jet is traveling at a speed of 350 miles per hour going east. A wind of 75 miles per hour is coming from the south west. What is the resultant speed of the jet? What is the heading the jet is going? Dake a drawing and estimate the solution and justify using mathematics. Use the scale 1 cm = 25mph.

See next page

$$x^2 = 350^2 + 75^2 - 2(350)(75)\cos 135$$

$$\boxed{x \approx 406.51 \text{ mph}}$$

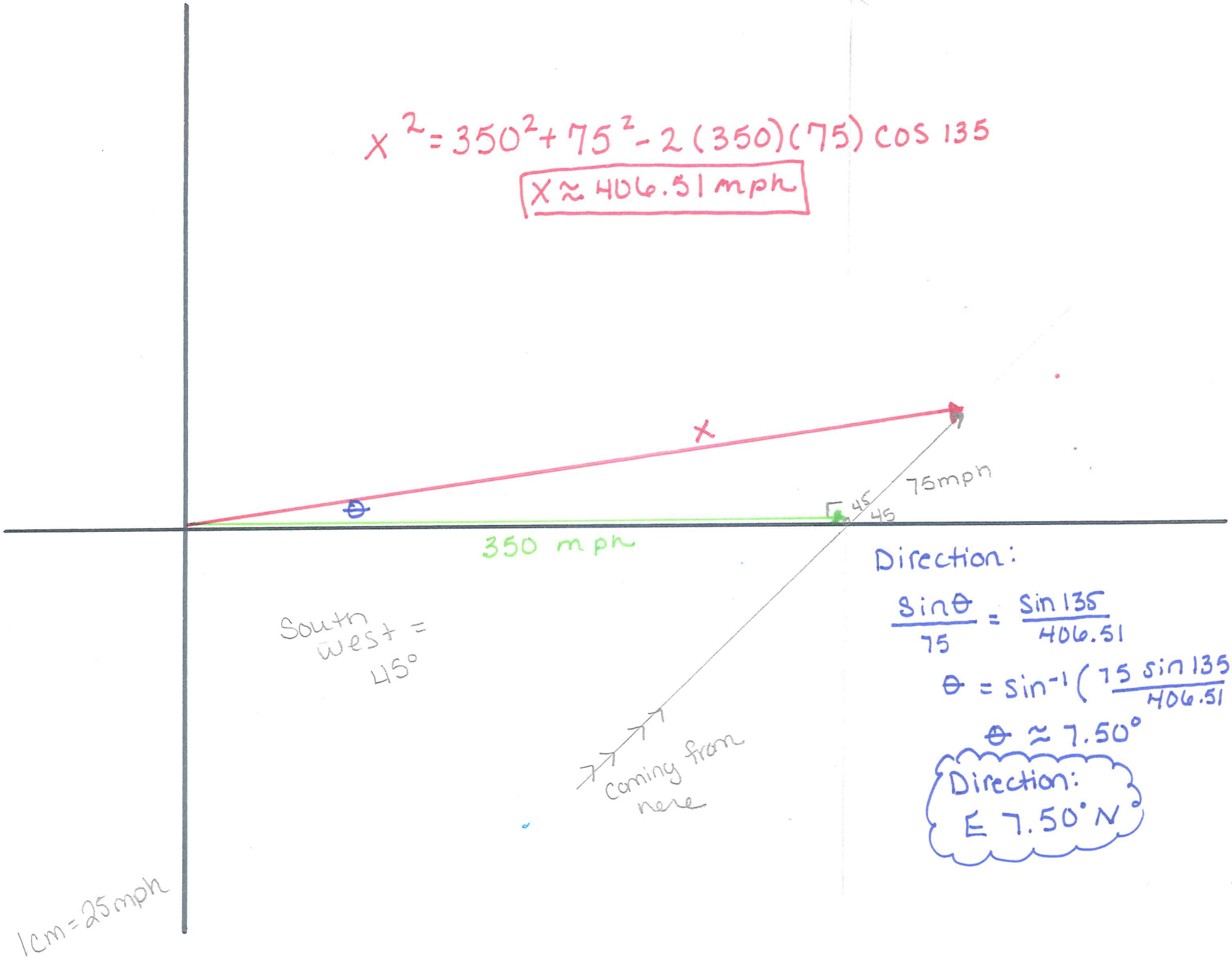

Direction:

$$\frac{\sin\theta}{75} = \frac{\sin 135}{406.51}$$

$$\theta = \sin^{-1}\left(\frac{75 \sin 135}{406.51}\right)$$

$$\theta \approx 7.50°$$

Direction: E 7.50° N